Acoustic Localisation for Spatial Reproduction of Moving Sound Source: Application Scenarios & Proof of Concept

Dominik Schlienger
Centre for Music & Technology
Sibelius Academy
University of the Arts Helsinki
dominik.schlienger@uniarts.fi

ABSTRACT

Despite the near ubiquitous availability of interfaces for spatial interaction, standard audio spatialisation technology makes very little use of it. In fact, we find that audio technology often impedes spatial interaction. In our workshop on music, space and interaction we thus developed the idea of real-time panning whereby a moving sound source is reproduced as a virtual source on a panning trajectory. We define a series of application scenarios where we describe in detail what functionality is required to inform an implementation. In our earlier work we showed that acoustic localisation potentially can provide a pervasive technique for spatially interactive audio applications. Playing through the application scenarios with acoustic localisation in mind provides interesting approaches. For one scenario we show an example implementation as proof of concept.

Author Keywords

Acoustic Localisation; Music, Space & Interaction; Auto-Pan; Real-time Spatialisation; Spatial Interactivity

Figure 1: Impressions from our Workshop on Music, Space & Interaction [21, 22]

1. INTRODUCTION

Spatial interactivity in interface design for musical expression has steadily gained importance over the last decades, a fact to which numerous contributions to the NIME conference bear witness [1, 2, 3, 4].

Applications which use spatial information to cue some musical parameters range from applications to gesturaly direct a virtual orchestra [5], or to controlling and process sound files gesturaly [6], to sound walks using GPS [7]. In earlier years, spatially interactive technologies have been developed specifically with musical applications in mind. The Theremin (1928) or Henry Schaefer's Potentiomètre d'Éspace (1951) are examples thereof. Today, often existing technologies are appropriated [8, 9], proprietary technologies originally developed for computer games, or data gloves [10, 11]. They all have in common that they create a relation between an aural event and a movement through physical space, be it directly linked like in the Theremin or abstracted as in the Locusstream Soundmap [12]

We find important to remember that this relation between movement and sound is not new. In fact, all music is intrinsically spatial. If we define movement as displacement over time in space, and if this movement is oscillating, it is just a question of scale and medium if it is visible, audible - or not. Spatiality in music is about how much importance is given to its spatial aspect, and the role space is given within a particular musical practice.[1] It is not something that has been brought to music through a new technological invention.[13, 14] This might sound tenuous from a traditional software development point of view. However, the fundamental kinaesthetic element of sound-making, when musicians actually cause the spatiality of sound, is the means of expression we are working with in spatially interactive music. Creative tool development on that notion of spatiality demands a transdiciplinary approach [15], and an enquiry into musical practices. Such tool development can then be based on the notion of designing culture[16] and also on an understanding of the importance of kinaesthesia in embodied agency [17].

What is new, is that we can record, reproduce and synthesize sound; map, track and measure movement in space and with increasing speed and accuracy. We can abstract sound from its original spatial source and reproduce it in another location, and this nigh ubiquitously [18, 19, 20].

However, to come to our point, the situation in most musical practices is, that, despite the availability of all this new technology and means to design it, spatial interaction in performance situations is often impeded rather than helped by

[1] Depending on the musical practice, this can be both audible and visible: A pianist's gestures are part of the performance, even if the gesture is only part of making a sound

Licensed under a Creative Commons Attribution 4.0 International License (CC BY 4.0). Copyright remains with the author(s).

NIME'16, July 11-15, 2016, Griffith University, Brisbane, Australia.
.

the use of electronic audio technology. In 2013, to research the affordances of existing- and explore the possibilities of hypothetical technology we founded our Workshop on Music, Space and Interaction (MS&I) at University of the Arts Helsinki. It was instituted to explore the nature of spatial musical interaction and how we use space in a practice of free, interdisciplinary improvisation [23]. Our main interest is in the use of technology, what it does, could do or does not do for creative possibilities, using tools and methods adopted from Participatory Design [24]. Focusing on the musical and expressive applications rather than the implementation of a particular technology, we collectively explore the question of what musical expression actually requires from spatial interactivity, as this, in our opinion, should be the driver behind its development.

Our early findings - partially documented in participants' blog entries [25] show that the main concern with existing mainstream spatial audio technology is that the kinaesthetic experience of space is often lost in its technological translation. This has implications in a plethora of ways which, to explore conclusively, goes beyond this article.

But the one major theme that recurred regularly in nearly every session and what we would like to make the subject of this article, is this: Looking at the uses of audio technology available to professional end users, we recurrently felt limited by the rigidity of loudspeaker layouts, and the limited ability to translate a performer's motion through the room musically while she or he is hooked up to the loudspeakers, even if this hook up is wireless. The frustration with this lack of flexibility led many participants, and at more than one occasion, to ditch their laptops connected to a state of the art surround sound system and pick up a simple object, like a wooden stick, for example. With respect to spatial interactivity and as an interface for musical expression the humble wooden stick just simply had the edge over the thousands of Euro worth of high-end equipment.

So the idea of spatialising a performer's trajectory as a virtual source on a multi-speaker system, what could possibly be described as a real-time auto-pan, was thus floated early on in the workshop. A variant of the same idea was to record a moving sound source's trajectory along with its audio recording, thus allowing a spatialised reproduction in real-time or at a later stage, or in another place.

We play through possible scenarios in detail and provide proof of concept for a simple implementation for one scenario using Acoustic Localisation techniques (AL), as our earlier research into its possibilities for interactive audio applications showed some promises in respect to scalability, precision, and competitiveness in comparison to existing systems. [26, 27]. Despite AL's relevance to the field, for standard audio technology, only few applications exist [28, 29, 30, 31].

The following section describes how we base our research in musical practice, introduce application scenarios and after a summary on AL provides an overview on the experimental layout for our first simple, proof of concept implementation on which we base our discussion on what we consider to be key aspects towards an implementation.

2. METHODS

We propose application scenarios for real-time spatialisations using AL technologies. We base the requirement for these applications on early findings of our work in MS&I where we adapted tools and methods developed for Participatory Design [24] and Interdisciplinary Improvisation [23], a method to enhance interdisciplinarity in the arts developed at Uniarts Helsinki since 2012

2.1 Music, Space & Interaction

We use the format of Interdisciplinary Improvisation sessions, where free sessions are followed by reflective discussions. Essentially we adapted Interdisciplinary Improvisation's stance on expertise, whereby, although participants are experts in their own field, to facilitate experimentation, they are encouraged to gain experiences outside of their own discipline. This allows to form common ground across disciplines. Participatory Design [24] is a long established design approach in, for example, software development in the workspace. But it is surprisingly rarely used in creative tool design. In a nutshell, the idea behind Participatory Design is that a technology should be developed by its users. In Participatory Design this idea is followed a lot more consequently as for example in user centred design.

MS&I's participants are professionals in music- composition and performance, dance, scenography, video, installation art, theatre, fine arts, architecture, game design, to just name a few. The workshop is held on weekends (Friday-Sunday) 3-4 times per term. To experience a place's spatiality we explore it for its particular sound, how our instruments sound differently depending from where we play them, how the room sounds if we excite it as an acoustic instrument, how we experience the aural quality of the space when moving through it and so on. We try to approach space as a sounding physical entity, as a found object, as a technological extension of our body, in short, its audio-kineasthetic potential for musical expression. Based on these experiences we then explore how the technologies, - some of which we bring in from our respective fields of expertise, some of which we invent on the spot, could enhance, improve or facilitate aspects of the experience. The data gained in MS&I is ethnographic. Every improvisation session is followed by discussions where we make notes, set out new experiments, compare experiences. Participants are also encouraged to contribute to a blog [25].

2.2 Acoustic Localisation

AL is generally defined for localisation in the whole acoustic frequency range, which includes infra- and ultra sound, We are solely interested in the frequency range which can be propagated and recorded with standard audio equipment, say, roughly, from 20 Hz to 30 kHz. In the further text the term AL refers to AL techniques using this frequency band. AL is used here as this is the implementation we are working on, but arguably any tracking device could be used instead. What makes AL attractive, and why it is our first choice, is that the application scenarios in question exist of an arrangement of loudspeakers and microphones.

The particular technique in question is Time Difference of Arrival (TDoA) For the Single Microphone Multiple Loudspeaker (SMML) approach, a signal distributed via loudspeakers is recorded on a microphone. From correlating the original signal with the recorded signal we measure the time delay. As the speed of sound through air is known *a priori*, we can work out the distance between the source and the microphone. In principle identical, but not in application, is to work out the TDoA using multiple microphones and an acoustic sound source not known *a priori*. We will call this the Multi Microphone or MM approach. (See Figure 2)

For some scenarios it is possible to use the acoustic signal which is the content of an application as the measurement signal. In some applications a dedicated measurement signal can be used instead, under the condition that these signals are not detrimental to the acoustic content of the application i.e. they are masked or non audible. For this *test signal* we used band-passed noise just above the frequency

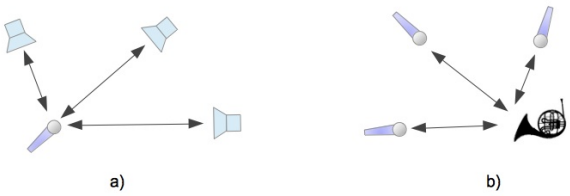

Figure 2: Time Difference of Arrival (TDoA). In a) TDoA of a known signal is measured on a single microphone. In b) TDoA of an unknown signal is measured on multiple mirophones

range audible to the human ear, as standard audio equipment generally reaches frequencies above it, sometimes up to 30 kHz. It is a lot more convenient, however, if the content signal can be used directly for the measurement, the reason being that the measurement can be made at no extra cost, it is data already available wherever a microphone is connected to a loudspeaker, or where a system has access to more than one microphone. This generalisation presumes that a distance measurement on its own is already enough for spatialisation which, as we will show, in some scenarios is in fact the case. Otherwise, generally, a spherical wave model applies, thus 4 TDoA measurements are necessary to conclusively trilaterate a position in 3D space.
With the view towards an implementation, a note here on spatialisation principles: For our scenarios, Ambisonics or Wavefront synthesis or Vector Based Amplitude Panning (VBAP) [32] are in principle applicable. However, although not explicitly a requirement on our scenarios we work with the assumption that the implementation will use VBAP, for sake of its simplicity and scalability, two or three loudspeakers suffice, their positions can be arbitrary.

2.3 Experimental Set Up

For our first implementation as proof of concept, we wrote a simple matlab script, using the Playrec library [33] which allows non-blocking soundcard access and thus continuous and simultaneous play and record. Newer versions of Matlab could do this natively, however, playrec provides insight into the sample by sample workings which was considered helpful for research purposes.

The layout of the space where the experiments were conducted is a 2.9 times 5.7 meter office space with a high ceiling at 3 meters, see Figure 3 for details. The room had been moderately acoustically treated and had a wideband reverberation time of 0.38 Seconds. Eight loudspeakers of type Meyer Sound MM4XP were spaced at 1.6 metres distance from each other squeezed to an oval inside a 4.6 x 2.5 right-angled rectangle at 1.5 metre height off the floor. The loudspeakers are co-axial two-way loudspeakers with a nominal frequency response from 135 Hz to 17 kHz ± 4dB. We used bandlimited noise between 17 -18.5 kHz as test signals. For the position of all loudspeakers see Figure 3.

The microphones used were of type AKG C417, and DPA VO4099V. The rest of the equipment were AKG Perception wireless SR 45 receivers and PT 45 Analogue Band D Senders for the microphones and a MOTU 16A sound card. The processor running Matlab was an 11-inch, Mid 2011 MacBook Air, 1.6 GHz Intel Core i5, running OSX 10.8.5 The Matlab version was R2013a.

The set up was for 2D panning for demonstration purposes only. Extending the current script to 3D panning is trivial: The only prerequisite for 3 dimensionality is that the loudspeakers are not all positioned on the same plane.

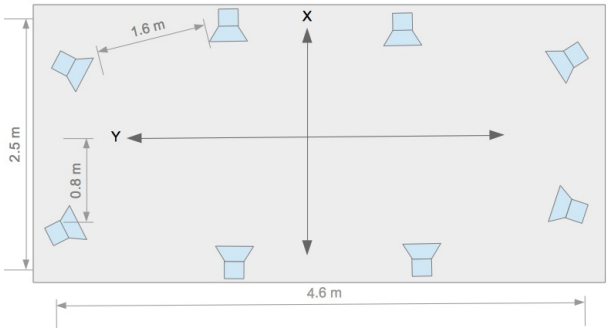

Figure 3: Loudspeaker Layout

2.4 Application Scenarios

We isolated four conceptual possibilities:

- Scenario 1: For traditional music practices: The sound source is in another space than where it is reproduced, e.g., stage, recording or broadcast studio.
- Scenario 2: The moving sound source to be reproduced is in the same space as the audience,
- Scenario 3: a performer's trajectory is reproduced in real-time but the content is or was recorded elsewhere.
- Scenario 4: Both the moving sound source and the trajectory were recorded separately and offline, the spatialisation happens temporally removed.

We can then analyse which approach is a better fit for SMML or MM and also why AL is a possible choice or not. For scenarios 1 and 2, we presume that there is a moving acoustic sound source, which is close-miked with a wireless microphone. The loudspeakers are in fixed positions. For scenario 3 and 4, the sound source is virtual, pre-recorded, electronic, or produced elsewhere.

Scenario 3 is a special case, as the the sound source arguably could have been, or can be, recorded as a close-miked acoustic source, as in Scenarios 1 and 2, but it is not, or was not moving along the trajectory in question when doing so. This is also an exception to scenario 4, as even if the sound is pre-produced, its trajectory is online and not predefined.

2.4.1 Two Spaces: Stage and Audience

We start with the scenario we are probably most familiar with from most musical practices, where the moving sound source is in another space than the audience, say on a stage, or in a studio. In this scenario the loudspeakers distributing the content are not in the performance area. An application in the mainstream for this scenario is, for example, to mirror the trajectories of musical performers on a stage by panning, to match the aural experience with what the audience experiences visually. The same principle applies also for a broadcast situation, where the spatialisation is reproduced in a place remote from the performance space or stage, but spatialised as it was in the performance. In this scenario, if the content signal is to be the measurement signal, the MM approach is clearly at an advantage, as the content signal is not necessarily distributed in the performance area. If there are loudspeakers in the performance area, a SMML approach might work if the content signal can be used for localisation. To use a SMML approach here with a distinct test signal will mean that the test signal has to be masked sufficiently not to create any audible impact on the content recording.

2.4.2 One Space: The Common

The moving sound source to be reproduced is in the same space as the audience. This approach is possibly best described as a real-time auto pan proper: A close-miked acoustic sound source produces a signal which is simultaneously played back on the loudspeakers panned to its closest phantom position.

Application areas for this approach could be for example installation art, participant - performances, exhibitions, public spaces, art-museum, festival commons or similar. To get this to work one way or other would indeed benefit a large community of artists and musicians.

2.4.3 Virtual Sound Source

The trajectory is reproduced in real-time but the content is recorded elsewhere or was pre-recorded This approach is of interest for many applications in electronic music, where the moving *sound source* might not actually be acoustic, (Laptop performance, electronic instruments, mobile phones, or similar) but also for interactive sound installations where the position of participants carrying a microphone as a sensor triggers certain events, or where a trajectory creates narrative meaning to musical content. It is a way to map offline content in real-time to an online, or a live trajectory in space. The trajectory is not known *a priori* If SMML is used, the applicability depends on the successful masking of the measurement signal - a distinct measurement signal is necessary as there is no close-miked acoustic sound source: Performers need to carry a microphone for positioning purposes only. Which would also be necessary for a MM approach. We implemented an approach based on simple distance readings as a proof of concept for this scenario, for the performance of the interactive piece *Leluhelikvartetti, a Hommage à Stockhausen.* (See Appendix B)

2.4.4 Track and Sound Temporally Separated

The moving sound source is spatially and temporally removed. In this scenario the same set of loudspeakers can be used. As the reproduction happens later than the recording of the trajectory, corrections are possible. Further, here it is possible, to record a trajectory separately and then apply it to a sound recorded elsewhere. The test signal could arguably be audible noise, as long as the performer recording the trajectory is happy with it. This approach is a bit like using motion capture in video animation: a trajectory is recorded, and then content mapped to it. In fact, this scenario, if a performer is equipped with many microphones, the recorded track could be used even as an equivalent to motion tracking

3. RESULTS AND DISCUSSION

We base our discussion of the application scenarios on the results from our test implementation, providing us with something tangible to theorise with. For demonstration purposes we split the tracking process into a two step sequence, first recording the trajectory and then reproducing it. The script in question can be modified to do both things in the same process, but it would be difficult to compare the original and the reproduced trajectory if it was to be observed at the same time:

We made a recording with a stereo microphone placed in the middle of the room, while moving along the trajectory with a close-miked live sound source. (See appendix A)This source's trajectory was reproduced using the Playrec script in Matlab, and recorded again with the same stereo microphone for comparison. The accuracy of the angles are best compared by a listening test in Appendix A. Figure 4 shows the localization results. The top row shows the azimuth angle in radians in relation to the loudspeaker positions over the same time span.

Our prototype works on the principle that we know which single loudspeaker is the closest based on the fact that we receive a signal. So actual panning is possible only in hindsight. During a trajectory, once a new loudspeaker is within reach, the distance between the newest and the last measurement can be calculated and an interpolation between the 2 points effected. Potentially, the system is constantly playing catch with the newest measurement and lag is unavoidable. With an increasing number of loudspeakers this can be improved. The algorithm which allows for a smooth transition between the loudspeakers thus causes a delay. The new position has to be reached before an interpolation is possible.

This is certainly not fast enough to control percussive instruments, but to spatialise an instrumentalist's trajectory across a stage, is within the margins we find acceptable. The latency of the distance measurement, however, albeit not used yet for any functionality, has no perceptible latency, and is defined by the systems buffer length only.

However, a localisation based on trilateration of distance measurements from more than one loudspeaker would clearly be significantly faster, as no interpolation on hindsight is necessary. The question of course is, why did we not apply this latter approach? - The nature of the test signal impacts on what is possible.

3.1 Distinct Test-Signal: Implications

In a SMML approach, we send uncorrelated signals to every loudspeaker. Then we measure the correlation between the original signal and the signal on the loudspeaker in question. Consequently, the measurement signal also contains the 7 signals sent to the other loudspeakers, effectively being noise. Based on these observation, we assume that we look at a systemic problem which needs a lot more investigation: Is it sensible to use test signals at all when they effectively add noise to an audio application? Would a MM approach not provide better results? What can be achieved with a multi frequency-band approach whereby the test signal would be split in a separate band per loudspeaker?

Using high frequency noise at the hearing threshold brings another limitation with it: In our previous research we stress that (theoretically) AL has the advantage over optical tracking in not needing line of sight between the tracked receiver and the test signal sender. However, the frequency bands we tested all have similar limitations as the diffraction of sound waves around objects requires the diffracted soundwave to be longer than the object it diffracts about. The frequencies between 17 kHz to 20 kHz are just up to 2 cm long. In line with this, our observations showed that we still get readings if we interfere the line of sight with a hand, but we lose the signal if we move our body between it. Arguably this is a better result than what can be achieved with optical tracking, particularly as this also works in the dark, but it is hardly the ultimate solution to line of sight issues in tracking technology.

3.2 Impact on Application Scenarios

Although we are aware that our test application is only a first small step towards an implementation, we also see many possibilities in precisely the approach taken due to its simplicity: We clearly see uses, for example, to provide panning trajectories for laptop performers. Also, as the trajectories can be stored as azimuth angles (over time) to a known origin, they can be reproduced with any arbitrary layout of loudspeakers, using VBAP, and also in 3D. To

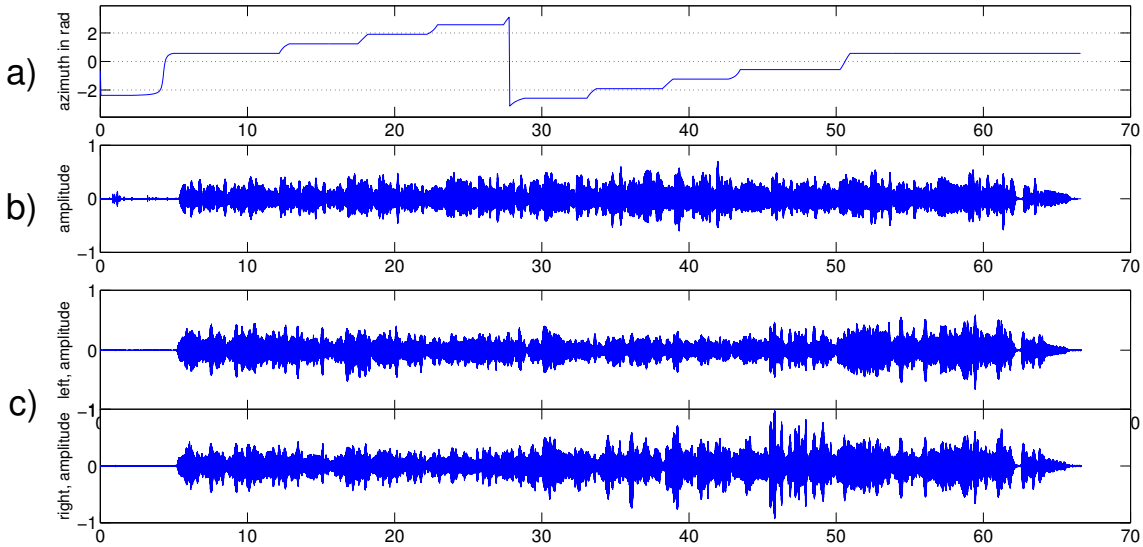

Figure 4: a) Azimuth of reproduced trajectory b) close-miked moving sound source c) Stereo recording over time in seconds.

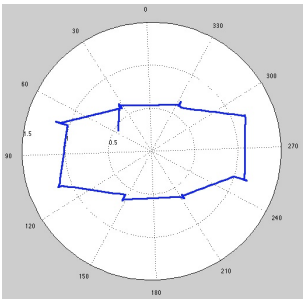

Figure 5: Azimuth of trajectory, polar, in degrees, radius in metres

Figure 6: Leluhelikvratetti, Music Centre Helsinki Nov 2015 [34]

compare the layout with a trajectory, see Figures 3 and 5.

An implementation for the use in the *common* scenario clearly needs more work, line of sight issues, as well as the test signal's impact on the content signal makes SMML a questionable choice: If we use the content signal as the measurement signal here, we will end up in an interesting situation: As we want the test signal to go to all loudspeakers, the content signal however panned to one location, in case of VBAP we would be hearing at most 3 but possibly 2 or simply one loudspeaker, the process would hence decide on one loudspeaker and not localise any further until we send the content signal again to all loudspeakers. Although we see potential uses for self calibration of sound sources to a fixed or temporary nearest loudspeaker, for panning of a moving sound source we see limitations. To use SMML using a distinct test signal is therefore the better option, as long as it does not impact on the content signal.

We believe, for many applications but particularly for our first scenario, a MM approach to be fruitful. A major advantage of the MM approach is also the fact that the content does not need to be delayed by any buffering in the processing, the content signal does not need to be known *a priori*.

In view of using VBAP for these spatialisations, it is noteworthy that the positions obtained by AL contain in fact more information than is needed: VBAP reproduces, even in its 3D implementation, a projection onto a sphere of a virtual sound source, expressing an angle. our trilaterated positions also contain depth information which could possibly be encoded in our reproduction, one way or other.

3.3 Leluhelikvartetti: A Pilot Project

A very similar script is behind *Leluhelikvartetti, hommage à Stockhasuen* (Appendix B) wherein the *Free Improvisation String Quartet's* close-miked playing is spatialised via four toy-helicopters carrying wireless microphones, flying around 8 near coincident radially outwards facing loudspeakers. (See Figure 6) As the whirring sound of the helicopters is part of the sonic texture of the piece, the test signal is masked and can be used without negative impact. The radial arrangement of the loudspeakers also mean that there is practically no conflicting information as to which loudspeaker is the closest one.

4. CONCLUSIONS, FUTURE WORK

Our results show conclusively that an approach to spatialisation using a SMML approach is applicable in practice, even when only distance estimates, and no trilaterated positions are available. The latency incurred by the smoothing algorithms were not detrimental to the listener experience. For a future implementation, based on the application scenarios discussed, lower latencies should be achievable with pulsed signal- and or multiple bandwidth approach for the SMML approach. We have not explored multiple microphone approaches yet, nor the possibilities the distance readings can provide for depth simulation particularly in the approach we used for the proof of concept. The distance measurements could be interpreted as attenuation over distance for example, or considerations as to how distance could be used as a parameter for reverberation or even simulation of first reflections could be of interest.

The Matlab Playrec scripts, form part of this publication (Appendix C), and other researchers are encouraged to further develop or rewrite the scripts provided: Matlab is being used for its convenience as a prototyping platform only, and implementation in a more musician friendly platform will find a community which has been waiting for this for some time.

5. ACKNOWLEDGMENTS

Our research is supported by a Kone Foundation Researchers Grant. We would like to thank the participants of the workshop on MS&I who's active collaboration provided the data for this research.

6. REFERENCES

[1] Kristian Nymoen, Ståle A. Skogstad, and Alexander R. Jensenius. SoundSaber - A Motion Capture Instrument. In *Proceedings of the International Conference on New Interfaces for Musical Expression*, pages 312–315, 2011.

[2] Andreas Bergsland and Robert Wechsler. Composing interactive dance pieces for the motioncomposer, a device for persons with disabilities. In Edgar Berdahl and Jesse Allison, editors, *Proceedings of the International Conference on New Interfaces for Musical Expression*, pages 20–23, Baton Rouge, Louisiana, USA, May 31 – June 3 2015. Louisiana State University.

[3] Mark A. Bokowiec. V'oct (ritual): An interactive vocal work for bodycoder system and 8 Channel spatialization. In *Proceedings of the International Conference on New Interfaces for Musical Expression*, pages 40–43, Oslo, Norway, 2011.

[4] Yang Kyu Lim and Woon Seung Yeo. Smartphone-based music conducting. In *Proceedings of the International Conference on New Interfaces for Musical Expression*, pages 573–576, London, United Kingdom, 2014. Goldsmiths, University of London.

[5] Eric Lee, Ingo Grüll, Henning Keil, and Jan Borchers. conga: A Framework for Adaptive Conducting Gesture Analysis. In *Proceedings of the International Conference on New Interfaces for Musical Expression*, pages 260–265, 2006.

[6] Wayne Siegel. Two hands (not clapping). `http://waynesiegel.dk/?page_id=24`, 2010.

[7] Rob van Rijswijk, Jeroen Strijbos, and Niels Bogaards. Walk With Me: A Work Of Pointless Curiosity. In *Proceedings of the International Computer Music Conference 2012*, pages 253–256, 2012.

[8] Lijuan Peng and David Gerhard. A Wii-Based Gestural Interface for Computer Conducting Systems. In *Proceedings of the International Conference on New Interfaces for Musical Expression*, pages 155–156, 2009.

[9] Sertan Şentürk, Sang Won Lee, Avinash Sastry, Anosh Daruwalla, and Gil Weinberg. Crossole: A gestural interface for composition, improvisation and performance using kinect. In *Proceedings of the International Conference on New Interfaces for Musical Expression*, Ann Arbor, Michigan, 2012. University of Michigan.

[10] Thomas Mitchell and Imogen Heap. SoundGrasp : A Gestural Interface for the Performance of Live Music. In *Proceedings of the International Conference on New Interfaces for Musical Expression*, pages 465–468, 2011.

[11] Elena Jessop. The vocal augmentation and manipulation prosthesis (vamp): A conducting-based gestural controller for vocal performance. In *Proceedings of the International Conference on New Interfaces for Musical Expression*, pages 256–259, Pittsburgh, PA, United States, 2009.

[12] LocusSonus. Soundmap. `http://locusonus.org/soundmap/051/`, 2016.

[13] Barry Blesser and Linda-Ruth Salter. *Spaces speak, are you listening? : experiencing aural architecture.* Cambridge, Mass. MIT Press, 2007.

[14] R. Zvonar. A history of spatial music. `http://cec.concordia.ca/econtact/Multichannel/spatial_music.html`, 2005.

[15] B. Nicolescu. *Manifesto of Transdisciplinarity.* SUNY Series in Psychoanalysis and Culture. State University of New York Press, 2002.

[16] Anne Balsamo. *Designing Culture: The Technological Imagination at Work.* Duke University Press, Durham, NC, USA, 2011.

[17] C. Noland. *Agency and Embodiment: Performing Gestures/Producing Culture.* Harvard University Press, 2009.

[18] Lev. Manovich. *The language of new media.* MIT Press, Cambridge, Mass., 2002.

[19] Paul Dourish and Genevieve Bell. *Divining a Digital Future: Mess and Mythology in Ubiquitous Computing.* MIT Press, Cambridge, MA, May 2011.

[20] P. Manning. *Electronic and Computer Music.* Oxford University Press, New York, revised and expanded edition, 2004.

[21] Timo Pyhälä. Ms&i at aalto lume, 2015.

[22] Senn Christopher. Ms&i in blackbox, 2015, 2015.

[23] James Andean. Research group in interdisciplinary improvisation: Goals, perspectives, and practice. `http://www.academia.edu/4158856/Research_Group_in_Interdisciplinary_Improvisation_Goals_Perspectives_and_Practice`, 2014.

[24] Toni Robertson and Jesper Simonsen. *Routledge international handbook of participatory design / edited by Jesper Simonsen and Toni Robertson.* Routledge New York, 2013.

[25] Dom Schlienger. Workshop on Music, Space & Interaction participants' blog. `http://creativemusictechnology.org/MS&P.html`.

[26] Dominik Schlienger and Sakari Tervo. Acoustic localisation as an alternative to positioning principles in applications presented at nime 2001-2013. In Baptiste Caramiaux, Koray Tahiroglu, Rebecca Fiebrink, and Atau Tanaka, editors, *Proceedings of the International Conference on New Interfaces for Musical Expression*, pages 439–442. Goldsmiths, University of London, June 30 – July 03 2014.

[27] D. Schlienger. Acoustic localisation techniques for interactive and locative audio applications. In *Locus Sonus Symposium #8 on Audio MobilitÃl', Proceedings*, 2014.

[28] I. Rishabh, D. Kimber, and J. Adcock. Indoor localization using controlled ambient sounds. In *Indoor Positioning and Indoor Navigation (IPIN), 2012 International Conference on*, Nov 2012.

[29] V. Filonenko, C. Cullen, and J. Carswell. Investigating ultrasonic positioning on mobile phones. In *Indoor Positioning and Indoor Navigation (IPIN), 2010 International Conference on*, Sept 2010.

[30] T. Janson, C. Schindelhauer, and J. Wendeberg. Self-localization application for iphone using only ambient sound signals. In *Indoor Positioning and Indoor Navigation (IPIN), 2010 International Conference on*, Sept 2010.

[31] Jeong Seob Lee and Woon Seung Yeo. Sonicstrument: A musical interface with stereotypical acoustic transducers. In *NIME*, pages 24–27. nime.org, 2011.

[32] Ville Pulkki. Virtual sound source positioning using vector base amplitude panning. *Journal Audio Eng. Soc*, 45(6):456–466, 1997.

[33] R. Humphrey. Playrec. `http://www.playrec.co.uk/index.php`, 2011.

[34] Wilma Hurskainen. Toy helicopter quartet, 2015.

APPENDIX

A. AUDIO & VIDEO FILES

`http://creativemusictechnology.org/alps.html#appendixA`
`http://creativemusictechnology.org/alps.html#video`

B. LELUHELIKVARTETTI

`http://creativemusictechnology.org/alps.html#appendixB`

C. PLAYREC SCRIPT

`http://creativemusictechnology.org/alps.html#appendixC`